DINOlift
UP TO THE JOB

Ultra-light.
Easy to operate.
Reliable and safe.

DINO® TRAILERS

TL SERIES

- Trailer mounted TL series
- Working height 10.5 m
- Telescopic boom

DINO® 105TL

Standard features in DINO 105TL:

- Ultra-light, only 950 kg (Picture 1)
- Ease of use (Picture 2)
- 1-person steel basket, capacity 130 kg (Picture 3)
- Easy to maintain
- Reliable and safe

Options available for DINO 105TL:

- Driving system (Picture 4)
- Outrigger limit switch indicator
- Extra outrigger plates

Technical data

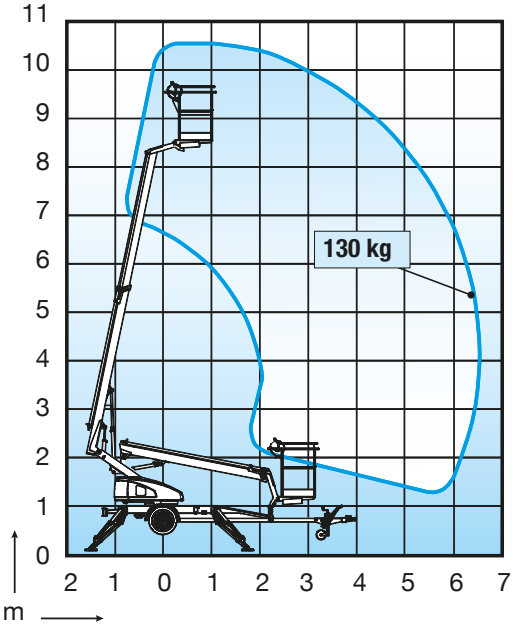

Max. working height	10.50 m
Max. platform height	8.50 m
Max. outreach	6.50 m
Support width	3.25/3.50 m
Basket size	0.75 x 0.80 m
Lifting capacity	130 kg
Transport length	5.43 m
Transport width	1.50 m
Transport height	1.99 m
Weight	950 kg
Boom control	2-speed
Boom rotation	+/- 355°
Driving system	optional
Electro motor	std

DINOlift

Dinolift Oy
Raikkolantie 145 • FI-32210 LOIMAA • FINLAND
Tel. +358 (0)20 1772 400 • Fax +358 (0)2 76 27 160
www.dinolift.com

Dinolift Oy / 31.7.2014

Dinolift Oy is a Finnish company that manufactures and sells high-quality DINO aerial work platforms since 1974. DINO platforms allow you to work above ground safely and effectively, while offering an enjoyable user experience from ground up. DINO lifts have been sold to more than 40 countries around the world, with exports accounting for 75% of production. The company's main markets are in the Nordic countries and in northern Europe.

Technical specifications are subject to change without prior notice.